SUSPENSION
SOLUTION DATASHEET

STRUT-LOCK SYSTEM (M8)

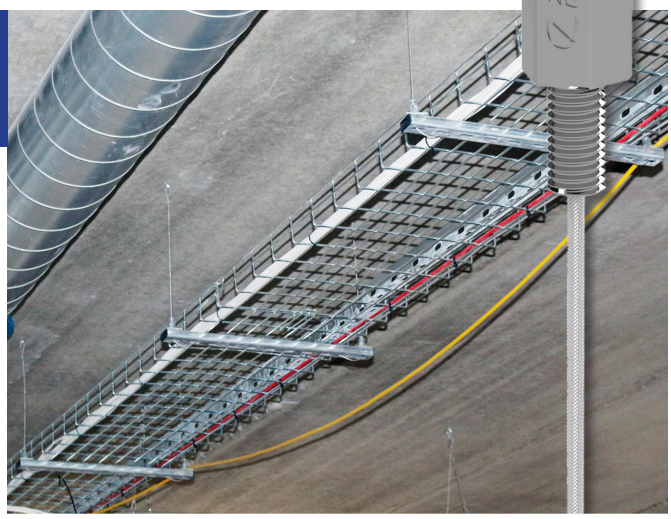

The M8 STRUT-LOCK system is used to support HVAC and M&E services from the S-RANGE of SUFIX wire supports. The devices are typically installed into profile channel which can then be hung from a wire suspension.

FEATURES

- 18th Edition Amendment 2 : 2022 compliant.
- Versatile – Use with channel nuts or nuts and washers (metric only).
- Quick to install and adjust.
- Safe working load (SWL) of 45 kg each per suspension.
- Secure lock-off.
- Manufactured from mild steel.
- Bright zinc plate finish.

APPLICATIONS

- Single tier trapeze brackets.
- Multi-tier trapeze brackets.
- Attach to existing bracketry.
- Compatible with 41×41 and 41×21 profile channels plus other channel types when compatible channel nuts are used (metric only).

FIXING OPTIONS

The M8 Strut-Lock system is available with the following fixing terminations:

LOOP END:
To form a choke knot for wrap-around anchor points such as purlins or I-beams. Ensure anchor points are suitable. Product code suffix: TPDM820LPS.

M6 CONCRETE HAMMER FIXING:
BS8539 approved with ETA, offering shallow embedment into cracked and non-cracked concrete. Ensure base material is suitable. Contact SUFIX for installation details. Product code suffix: TPDM820CS.

DESIGNED FOR STATIC LOADS THAT ARE SUPPORTED VERTICALLY

M8 × 60 EYEBOLT:
To couple with female threaded components (metric only). Ensure components are compatible to complete the installation. Product code suffix: TPDM820THS.

Other fixing options are available on request.

Note: Only for static loads that are supported vertically. Always ensure the base material or anchor point are suitable to support the intended load.

INSTALLATION

Locating a Strut-Lock Device Into Channel – Building a Single-tier Trapeze Bracket:

1. Couple with square washer and channel nut.
2. Position assembly into desired channel location.
3. Tighten into position using a 15 mm spanner. Turn clockwise.
4. Back-off the locking collar. Do not undo fully. Depress plunger.
5. Insert wire rope through the plunger at the top of the device.
6. Adjust the position by depressing the plunger and moving along on the wire.
7. Once the trapeze bracket is in position, release the plunger and wind the locking collar up to the shoulder.
8. Lock the trapeze position by turning the locking collar clockwise.

Repeat steps 1 - 8 to build a multi-tier bracket.

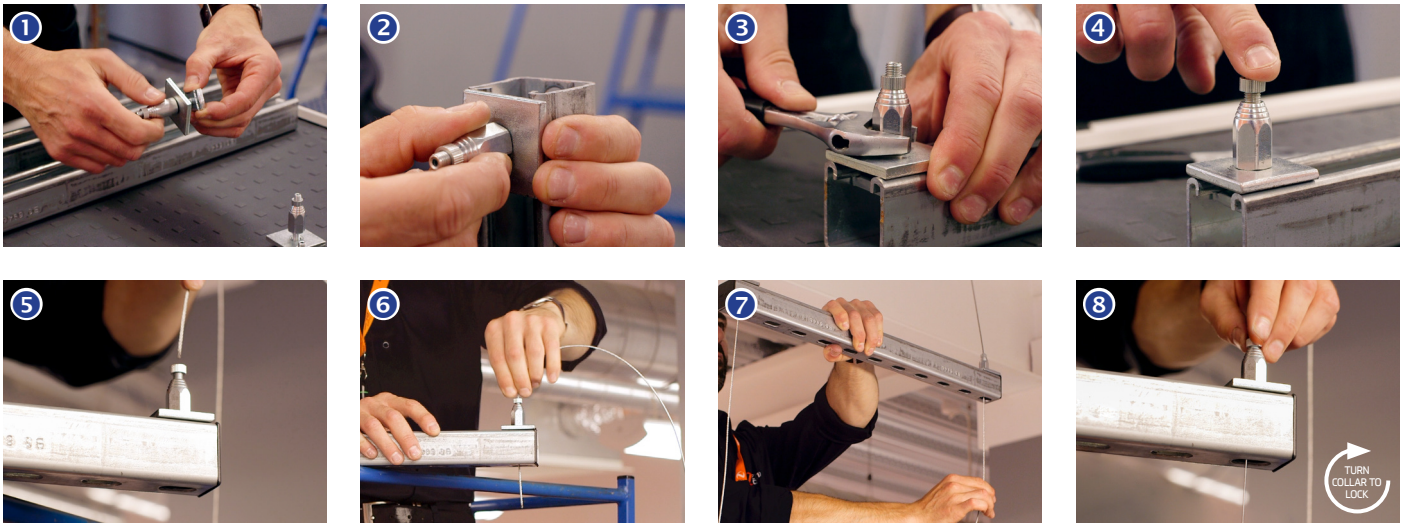

▲ STRUT-LOCK INSTALLATION.

Torque setting: It is recommended that the Strut-Lock device is not overtightened during installation. If it is possible to apply a torque value during installation, this should be no more than 15 Nm.

TO UNDO:

1. Undo locking collar.
2. Depress plunger.
3. Reposition device to required height.
4. Re-lock collar.

PLEASE NOTE:
Always ensure the load is supported before actuating the plunger to perform adjustment.

DIMENSIONS OF THE LOCKING DEVICE

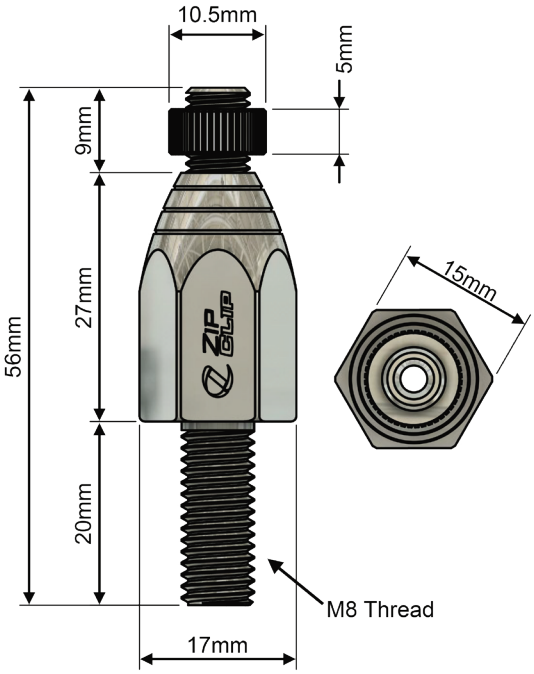

MANUFACTURERS RECOMMENDATIONS

The SUFIX Strut-Lock system is designed to support **STATIC loads only**.

Dynamic and shock loads must be avoided and can greatly increase the overall weight of the product being suspended and therefore compromise the safe working load of the suspension. Always take into account the nature of the install process. Beware of dynamic or shock loading.

To ensure integrity and safety of the system only SUFIX wire should be used.

- Do not exceed the safe working load (SWL) of the product.
- Do not use for angled wire supports.
- Do not use locking devices with a coated cable.
- Do not paint or apply any other coating.
- Do not lubricate.
- Do not use for lifting applications.
- Remove any frayed cable prior to inserting into the locking devices.
- Do not shock load.
- Do not use for dynamic loads/installations.
- Do not overload.
- Do not mix SUFIX systems with other wire suspension manufacturers products.
- Do not use in corrosive environments, e.g. chlorinated environments.

For specialist applications, such as corrosive environments, please contact SUFIX Technical Department.

For further information on SUFIX Tel +44 (0) 1372 370 084

E-mail: leatherhead@masltd.com